Cambridge Assessment International Education
Cambridge International General Certificate of Secondary Education

COMPUTER SCIENCE **0478/13**

Paper 1 **May/June 2018**

MARK SCHEME

Maximum Mark: 75

Published

This mark scheme is published as an aid to teachers and candidates, to indicate the requirements of the examination. It shows the basis on which Examiners were instructed to award marks. It does not indicate the details of the discussions that took place at an Examiners' meeting before marking began, which would have considered the acceptability of alternative answers.

Mark schemes should be read in conjunction with the question paper and the Principal Examiner Report for Teachers.

Cambridge International will not enter into discussions about these mark schemes.

Cambridge International is publishing the mark schemes for the May/June 2018 series for most Cambridge IGCSE™, Cambridge International A and AS Level and Cambridge Pre-U components, and some Cambridge O Level components.

IGCSE™ is a registered trademark.

This syllabus is approved for use in England, Wales and Northern Ireland as a Cambridge International Level 1/Level 2 Certificate.

This document consists of **12** printed pages.

© UCLES 2018

Generic Marking Principles

These general marking principles must be applied by all examiners when marking candidate answers. They should be applied alongside the specific content of the mark scheme or generic level descriptors for a question. Each question paper and mark scheme will also comply with these marking principles.

GENERIC MARKING PRINCIPLE 1:

Marks must be awarded in line with:

the specific content of the mark scheme or the generic level descriptors for the question
the specific skills defined in the mark scheme or in the generic level descriptors for the question
the standard of response required by a candidate as exemplified by the standardisation scripts.

GENERIC MARKING PRINCIPLE 2:

Marks awarded are always **whole marks** (not half marks, or other fractions).

GENERIC MARKING PRINCIPLE 3:

Marks must be awarded **positively**:

marks are awarded for correct/valid answers, as defined in the mark scheme. However, credit is given for valid answers which go beyond the scope of the syllabus and mark scheme, referring to your Team Leader as appropriate
marks are awarded when candidates clearly demonstrate what they know and can do
marks are not deducted for errors
marks are not deducted for omissions
answers should only be judged on the quality of spelling, punctuation and grammar when these features are specifically assessed by the question as indicated by the mark scheme. The meaning, however, should be unambiguous.

GENERIC MARKING PRINCIPLE 4:

Rules must be applied consistently e.g. in situations where candidates have not followed instructions or in the application of generic level descriptors.

© UCLES 2018

GENERIC MARKING PRINCIPLE 5: Marks should be awarded using the full range of marks defined in the mark scheme for the question (however; the use of the full mark range may be limited according to the quality of the candidate responses seen).
GENERIC MARKING PRINCIPLE 6: Marks awarded are based solely on the requirements as defined in the mark scheme. Marks should not be awarded with grade thresholds or grade descriptors in mind.

© UCLES 2018

Question	Answer	Marks
1	One mark per each sensor (sensors must be different):	5

Application	Sensor
Weighing a baby in a hospital	Pressure
Turning off a kettle when it boils	Temperature
Controlling an automatic door	Infrared / Light / Pressure
Monitoring the air quality in an aeroplane	Oxygen / Gas / Humidity
Counting cars crossing a bridge	Pressure / Infrared / Magnetic

Question	Answer	Marks
2	**Term** / **Application**	2

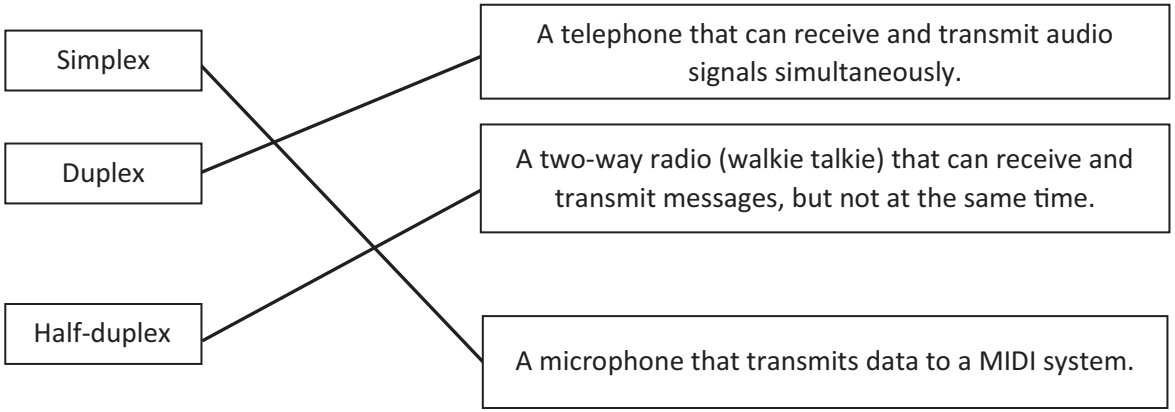

Three correct lines = 2 marks
Two or one correct line = 1 mark

Question	Answer	Marks
3	2 marks per issue from: Phishing – Legitimate looking emails sent to use – When user clicks on attachment / link sent to fraudulent website – Asked to reveal/designed to steal sensitive information Pharming – Malicious code loaded on user hard drive – Will redirect URL requests to fraudulent website – Asked to reveal/designed to steal sensitive information Spam – Junk / unwanted email – Sent to large numbers of people – Used for advertising / spreading malware – Fills up mail boxes	**6**

Question	Answer	Marks
4(a)(i)		**4**

Received Byte	Transmitted correctly (✓)	Transmitted incorrectly (✓)
10001011		✓
10101110	✓	
01011101	✓	
00100101	✓	

Question	Answer	Marks
4(a)(ii)	**One** from: – ARQ – Check Sum	**1**

Question	Answer	Marks
4(b)(i)	– Multiple bits / byte(s) sent at the same time – Using multiple wires	**2**
4(b)(ii)	Any **one** from e.g.: – Integrated Circuits – Any appropriate CPU buses – Any suitable device connection that uses parallel	**1**
4(b)(iii)	Two from: – Bits remain synchronised … – … reducing data errors – Only single wire is required … – … more cost effective to install/manufacture	**2**
4(c)(i)	– Encrypted text is meaningless – Need the key to decrypt the text	**2**
4(c)(ii)	– Increase length / more bits used for key … – … will generate more possibilities for key / less chance of decryption by brute force method	**2**

Question	Answer	Marks
5(a)	(0)1101011	**1**
5(b)	000 100101100 1 mark for three leading zeros, 1 mark for correct binary number	**2**
5(c)	B3 1 mark for each correct character	**2**
6(a)	Any **two** from: – A signal sent from a device / software – Requests processor time // Processor stops to service interrupt – Interrupts have different priorities	**2**

© UCLES 2018

Question	Answer	Marks
6(b)	Any **three** from e.g.: – Keyboard – Printer – Mouse	**3**

Question	Answer	Marks
7(a)	Any **three** from: – Does not require peripherals (mouse or keyboard) – Number of possible inputs limited / menu driven interface – Less chance of input error – Resistant to weather	**3**
7(b)	– Uses two/multiple layers – When top layer touched / pushed two layers make contact – Circuit is completed when layers touch – Point of contact is determined/calculated	**4**

© UCLES 2018

Question	Answer	Marks
8(a)		**4**

A	B	C	X
0	0	0	**1**
0	0	1	**1**
0	1	0	**0**
0	1	1	**1**
1	0	0	**0**
1	0	1	**1**
1	1	0	**1**
1	1	1	**1**

All 8 for 4 marks
6 or 7 for 3 marks
4 or 5 for 2 marks
2 or 3 for 1 mark

© UCLES 2018

Question	Answer	Marks
8(b)	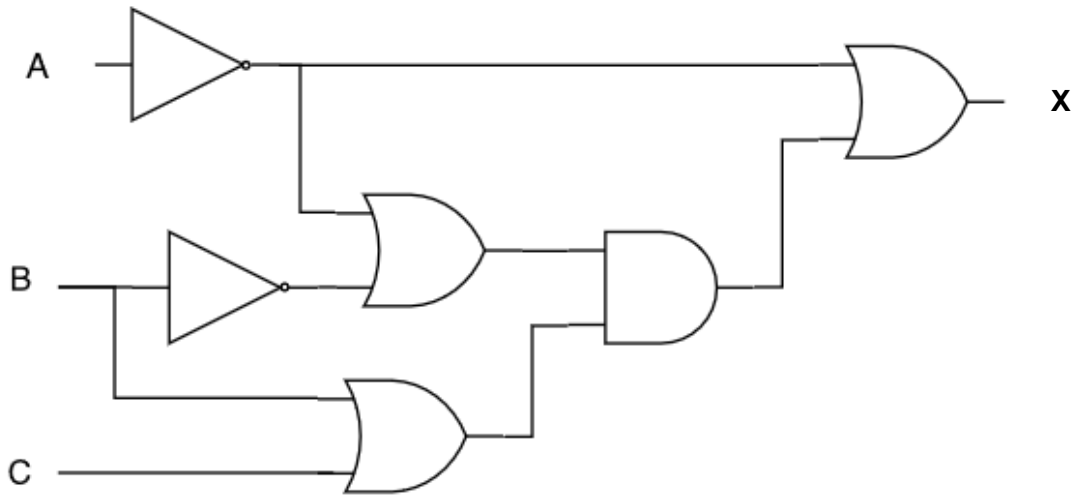 1 mark per gate with correct inputs	**6**

<table>
<tr><th>Question</th><th>Answer</th><th>Marks</th></tr>
<tr><td>9</td><td>
<table>
<tr><th>Statement</th><th>Assembler (✓)</th><th>Compiler (✓)</th><th>Interpreter (✓)</th></tr>
<tr><td>Translates high-level language into machine code</td><td></td><td>✓</td><td>✓</td></tr>
<tr><td>Provides error diagnostics</td><td>✓</td><td>✓</td><td>✓</td></tr>
<tr><td>Translates whole program to object code in one operation</td><td>✓</td><td>✓</td><td></td></tr>
<tr><td>Translates and executes one line of code at a time</td><td></td><td></td><td>✓</td></tr>
</table>
1 mark for each correct column
</td><td>3</td></tr>
</table>

<table>
<tr><th>Question</th><th>Answer</th><th>Marks</th></tr>
<tr><td>10</td><td>Any six from:
– Program counter (PC) holds address / location of the instruction
– The address held in PC is sent to MAR
– Address is sent using address bus
– PC is incremented
– The instruction is sent from address in memory to MDR
– Instruction is transferred using the data bus
– Instruction sent to CIR</td><td>6</td></tr>
</table>

Question	Answer	Marks
11	Any **three** from: – Optical media – Non-volatile – Offline – Single (continuous spiral) track – Data stored using lands / pits – Read using (red) lasers – Can be read only (R) or read write (RW)	**3**

Question	Answer	Marks
12	$256 \cdot 200 = 51\,200$ $\frac{51\,200 \cdot 16}{8} = 102\,400$ $\frac{102\,400}{1024} = 100$ Answer 100 kB One mark for correct answer and two marks for correct calculations.	**3**

Question	Answer	Marks
13	Any **six** from e.g.: – Provide access to the internet / dial up / broadband – Usually charge a monthly fee – Monitor usage – Give users an IP address – Determine bandwidth – Supports domain names – Provide security services – Provide web hosting facilities – Provide access to Email / Mailbox – Provides online data storage	**6**

© UCLES 2018